REV.	DESCRIPTION	DATE	BY
A.1	Initial Release	09/04/2025	JDO
A.2	Layout Change	11/18/2025	JDO
A.3	Customer Change	12/2/2025	JDO

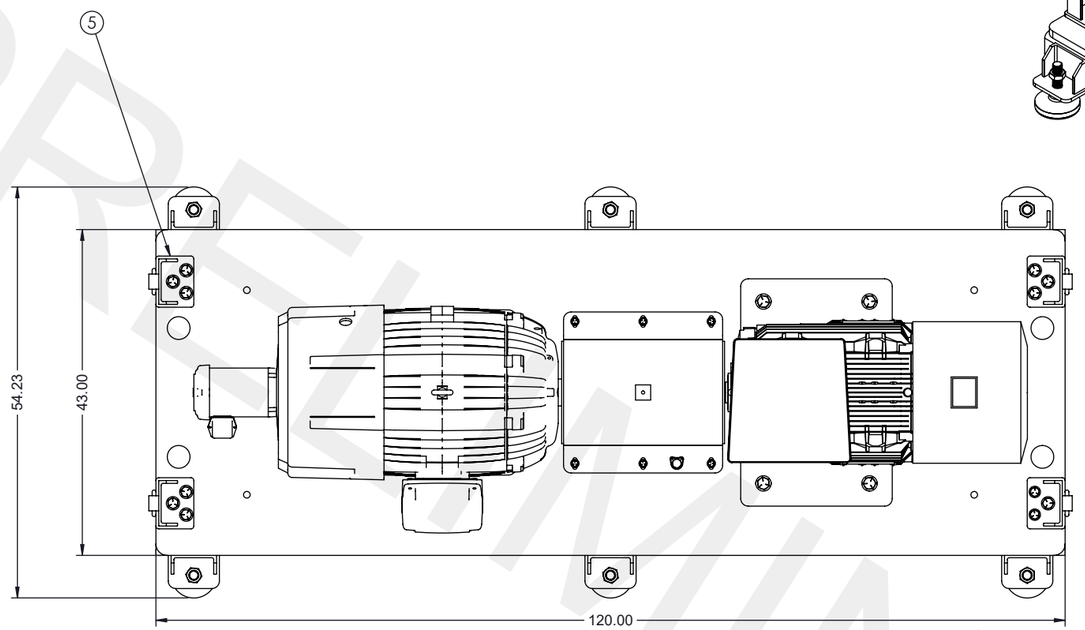

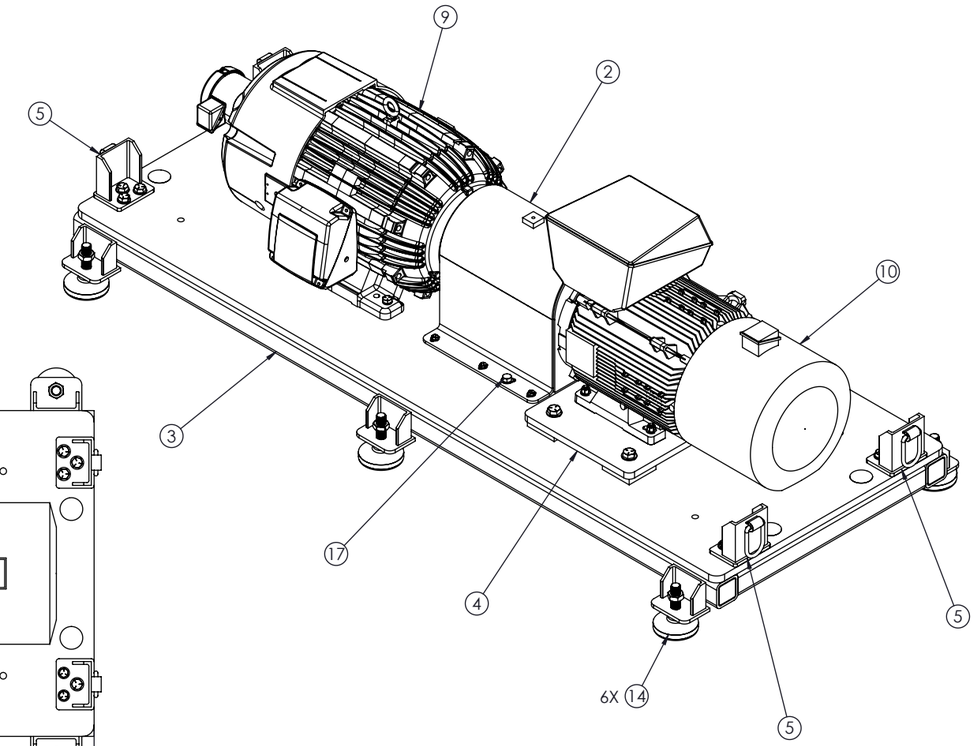

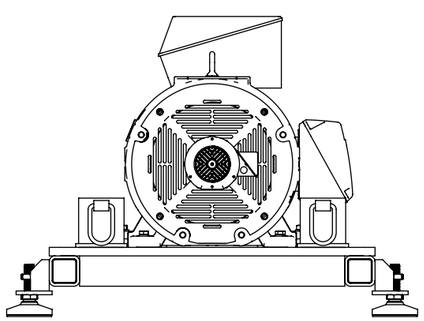

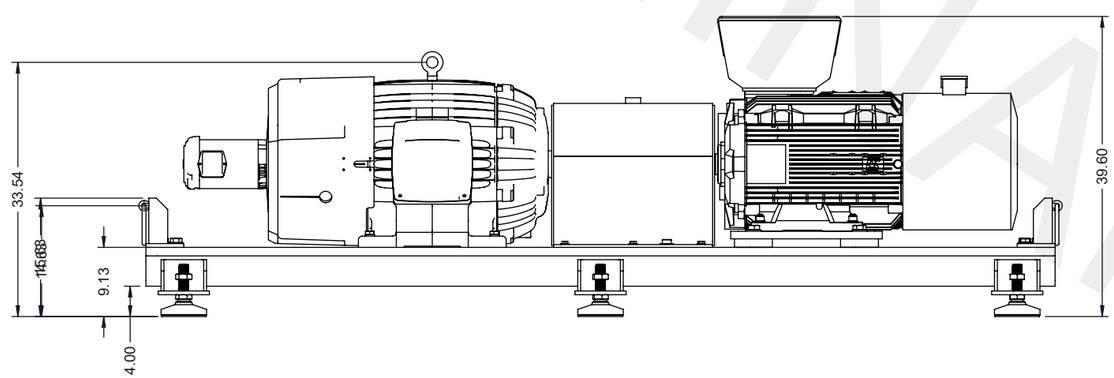

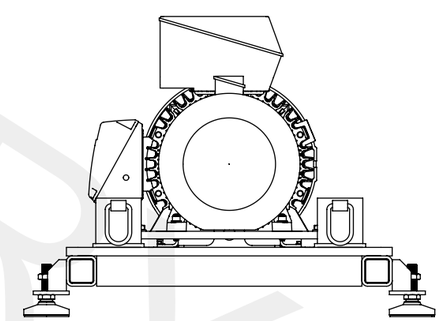

Item	Qty	Part Number	Description	Vendor
1	1	00005-27521-A002	Torque Sensor Stand	IFP
2	1	00005-27521-A005	Shield Assembly	IFP
3	1	00005-27521-A006	Bed Assembly	IFP
4	1	00005-27521-A008	Motor Stand	IFP
5	4	00005-27521-A009	Tie-Down Bracket Weldment	IFP
6	1	00005-27521-P018	Torque Sensor Bracket	IFP
7	2	00005-27521-P030	Plate	IFP
8	2	00005-27521-P035	Limit Switch Bracket	IFP
9	1	B125T2C	125 HP, 1800 RPM, Three Phase, 460 V, 60 Hz, 444T	Nidec
10	1	5250420	LSHRM225MG1M,169HP,1800,460,R	Nidec
11	1	LCCA-190-3KNM-NOCASE	3KNM Torque Meter	MME
12	1	D-ATQC-11-330-85.7-65	Coupling Set for Torque Meter	MME
13	2	12T962	Limit Switch: Coil Spring, 4 Mounting Holes, 3.94 in Actuator Lg	Dayton
14	6	6330K33	Vibration-Damping Swivel Leveling Mount w/ Steel Base, 1-1/4"-7 Threaded Stud	McMaster
15	2	9307K143	Buna-N Rubber Grommet for 1-1/4" Hole Diameter and 3/16" Material Thickness, 3/4" ID	McMaster
16	1	440N-Z18PT	Actuator, SensaGuard , Standard Actuator ,18mm Dia, Plastic	Allen-Bradley
17	1	440N-Z30PT	Actuator, SensaGuard, Standard Actuator, 30mm Dia, Plastic	Allen-Bradley

UNLESS OTHERWISE SPECIFIED
BREAK SHARP EDGES 0.030
DIMENSIONS IN INCHES
X.XXX ±0.005
X.XX ±0.05
X.X ±0.5
FRAC. (Raw Material) ±1/16
FRAC. (Assembly) ±1/4
ANGLES ±0.5°
3rd ANGLE PROJECTION
SOME LINES OMITTED FOR CLARITY

THIS DRAWING CONTAINS PROPRIETARY INFORMATION OF IFP MOTION SOLUTIONS INC. NEITHER RECIEPT NOR POSSESSION THEREOF CONFERS ANY RIGHT TO REPRODUCE, USE, OR OTHERWISE DISCLOSE IN WHOLE OR IN PART ANY SUCH INFORMATION WITHOUT WRITTEN AUTHORIZATION FROM IFP.

DO NOT SCALE

TITLE: Test Bed w/ Motors

CUST: McNair Aerospace Center

iFP Motion Solutions Inc.

SIZE: B | ENG | DRN: jolsem | WT | CR DATE: 9/4/2025 | SHEET 1 OF 2 | C58762-27521DA.3

PRELIMINARY

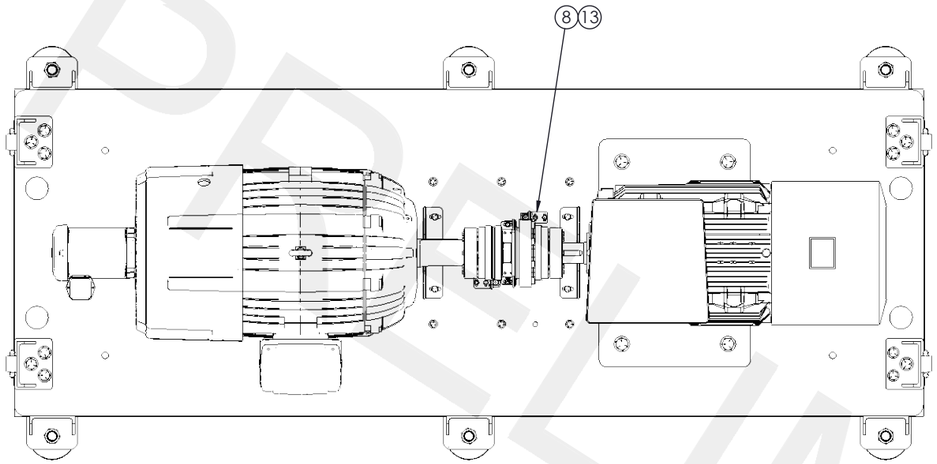

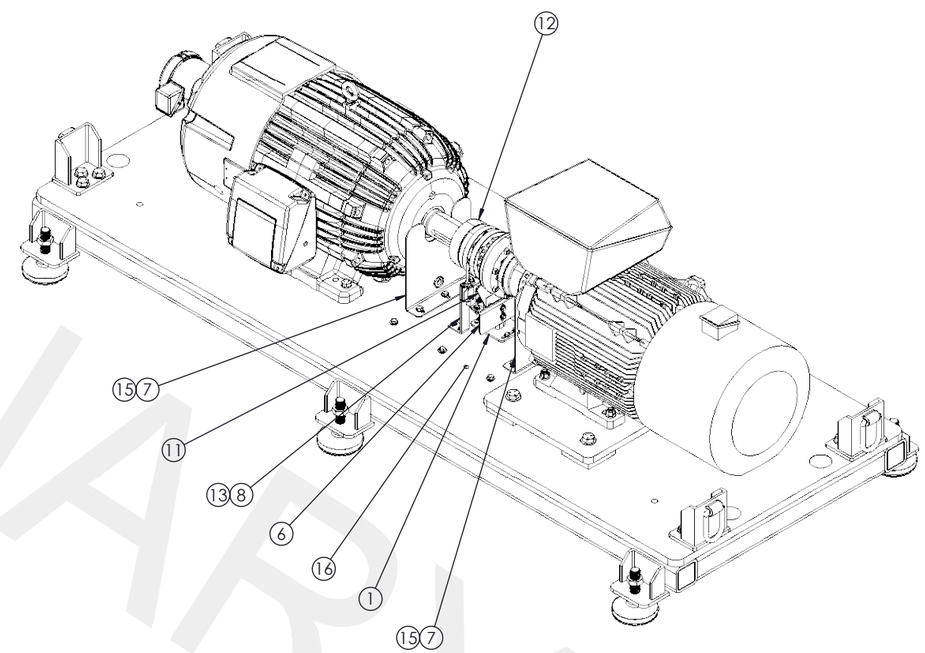

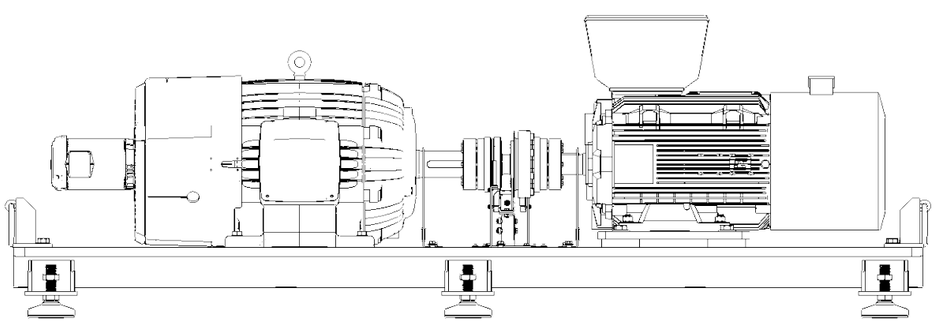

PRELIMINARY

UNLESS OTHERWISE SPECIFIED BREAK SHARP EDGES 0.030 DIMENSIONS IN INCHES X.XXX ±0.005 X.XX ±0.05 X.X ±0.5 FRAC. (Raw Material) ±1/16 FRAC. (Assembly) ±1/4 ANGLES ±0.5° 3rd ANGLE PROJECTION SOME LINES OMITTED FOR CLARITY	THIS DRAWING CONTAINS PROPRIETARY INFORMATION OF IFP MOTION SOLUTIONS INC. NEITHER RECIEPT NOR POSSESSION THEREOF CONFERS ANY RIGHT TO REPRODUCE, USE, OR OTHERWISE DISCLOSE IN WHOLE OR IN PART ANY SUCH INFORMATION WITHOUT WRITTEN AUTHORIZATION FROM IFP. DO NOT SCALE	TITLE Test Bed w/ Motors CUST McNair Aerospace Center ENG DRN jolsem SIZE B WT CR DATE 9/4/2025 SHEET 2 OF 2	iFP Motion Solutions Inc. C58762-27521DA.3